REV	CHANGE DESCRIPTION	ECN	DATE	REVISED BY	APPROVED BY

50-7.5-12-O

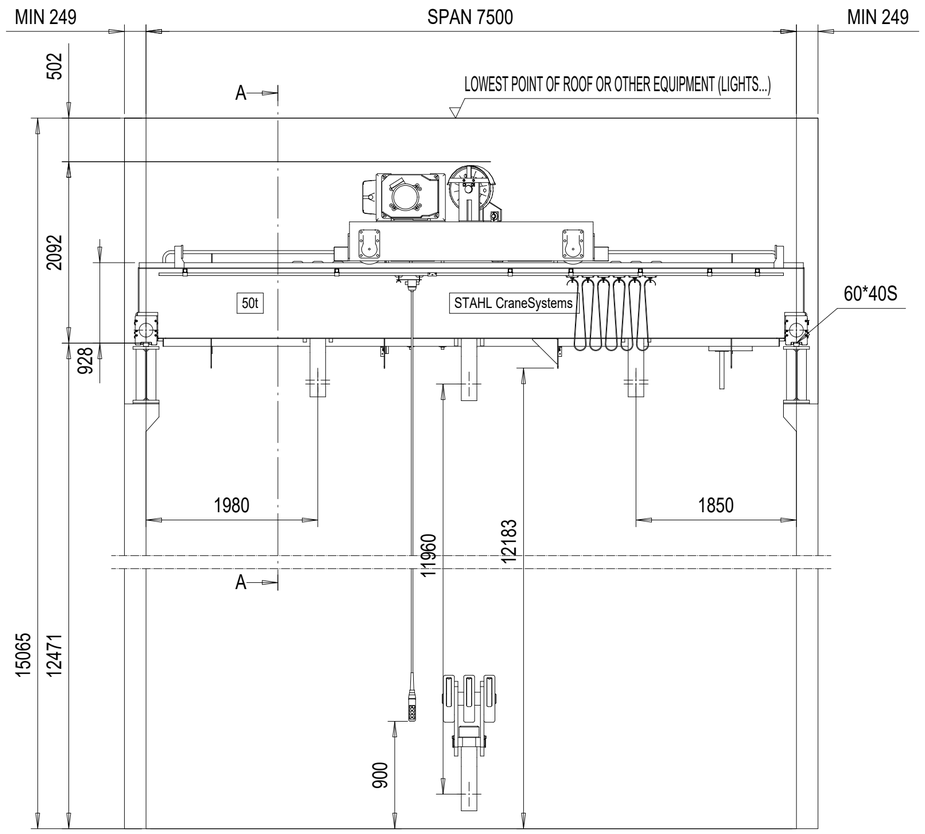

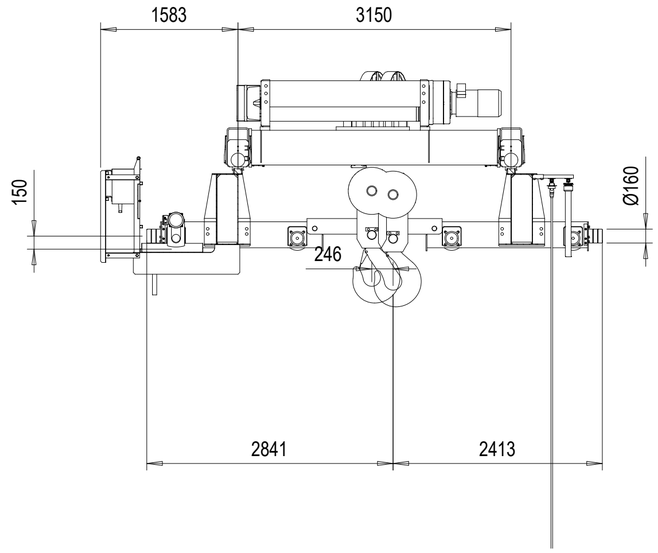

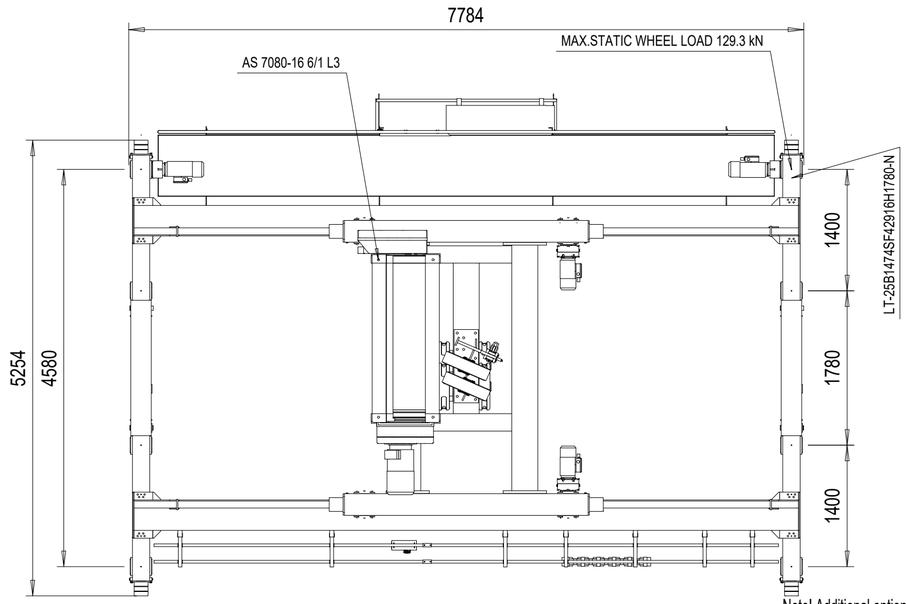

Note! Additional options can affect weights and dimensions of some components.

TECHNICAL DATA

VIEW A-A

CRANE

LOAD	: 50000 kg
SPAN	: 7.5 m
LIFTING HEIGHT	: 11.96 m
TRAVELLING SPEED	: 40/10 m/min 2-speed pole change
WEIGHT OF BRIDGE	: 5020 kg
TOTAL WEIGHT	: 10220 kg
CRANE CLASSIFICATION	: U4/Q2, EN13001-1
CRANE DRIVE GROUP	: 25 m (D_lin6) / M5
LENGTH OF RUNWAY	: 50 m

HOIST

HOISTING SPEED	: 2.6/0.43 m/min 2-speed
TRAVERSING SPEED	: 20/5 m/min 2-speed pole change
WEIGHT OF TROLLEY	: 5200 kg
HOIST GROUP	: 3,0 + 3,0 m (D_lin4) / ISO M5

ELECTRICAL EQUIPMENT

MAIN/CONTROL VOLTAGE	: 380 / 48 V; 50 Hz
SUPPLY POWER	: 30.5 kW

TOLERANCES

CRANE	:
RUNWAY	:

USE OF CRANE

: Indoor Use crane -10°...40° C

Project sketch - for information only
Subject to changes without prior notice
Projektskizze - Änderungen vorbehalten

Note: Verify Panel Length and
Adjust Opening as Reqested

Approved: Place | Date | Company (Company stamp)

Customer

STAHL CraneSystems

Company: STEPHAN CraneSystems GmbH

Free size tolerance

Material

Quotation No.
Order No.

Reproduction and transmission to third parties is not permitted
We reserve all rights under copyright for this drawing

SHD50t x 7.5m Hol:12m SP

	Datum	Name
Drawn by	19.11.2018	DMA/XRS
Checked by		
Released		

Issue | N/a

50-7.5-12-O

Replaced by

Copy to

Version DAS
NSL
TCHAR
Scale 1:50

This document is the absolute property of STEPHAN CraneSystems GmbH. This document must not be copied without the written permission of STEPHAN CraneSystems GmbH or its parent company STAHL CraneSystems GmbH. The contents thereof must not be disclosed to a third party nor be used for any unauthorized purpose. Contravention will be prosecuted.

50-7.5-12-O-I

REV	CHANGE DESCRIPTION	ECN	DATE	REVISED BY	APPROVED BY

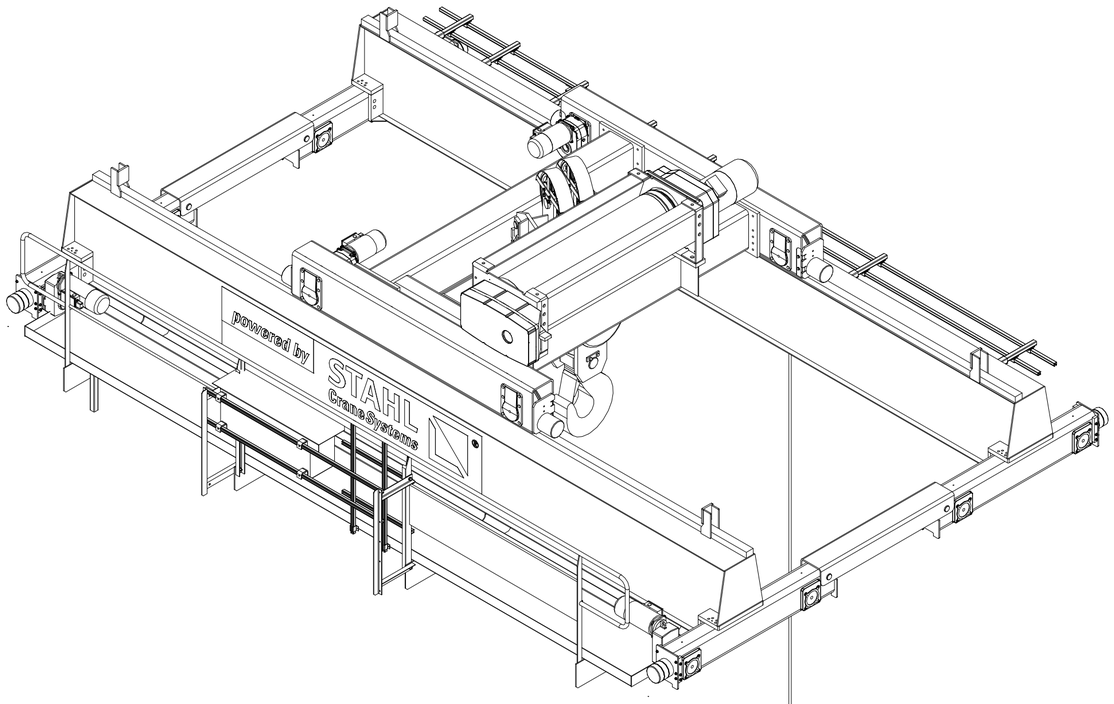

Approved: _____ Place _____ Date _____ Company (Company stamp)

Customer

STAHL CraneSystems

Free size tolerance

Material

Quotation No.
Order No.

Reproduction and transmission to third parties is not permitted
We reserve all rights under copyright for this drawing

SHD50t x 7.5m Hol:12m SP

Version DAS
NSL
TCHAR

Scale 1:2.5

Company: STEPHAN CraneSystems GmbH

	Datum	Name
Drawn by	19.11.2018	DMA/XRS
Checked by		
Released		

Issue N/a

50-7.5-12-O-I

Replaced by

Copy to

This document is the absolute property of STEPHAN CraneSystems GmbH. This document must not be copied without the written permission of STEPHAN CraneSystems GmbH or its parent company STAHL CraneSystems GmbH.
The contents therein must not be disclosed to a third party nor be used for any unauthorized purpose. Contravention will be prosecuted.