REV	CHANGE DESCRIPTION	ECN	DATE	REVISED BY	APPROVED BY

25-16.5-12-O

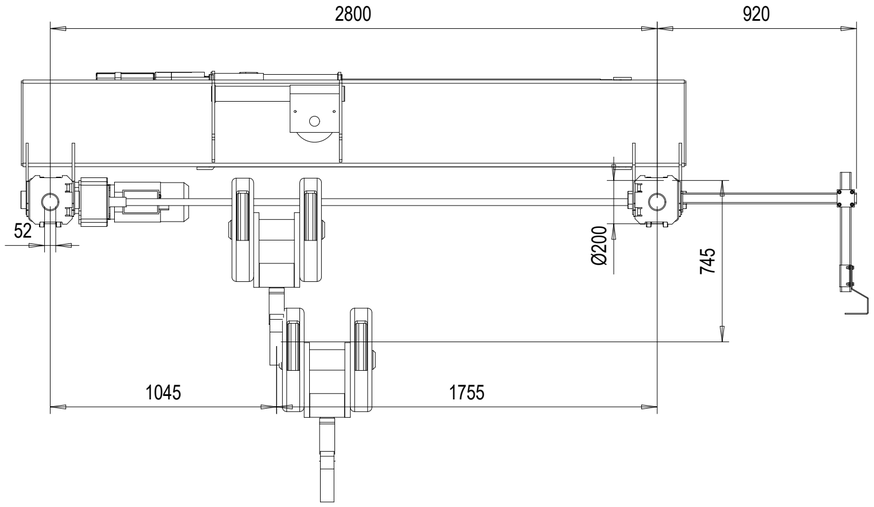

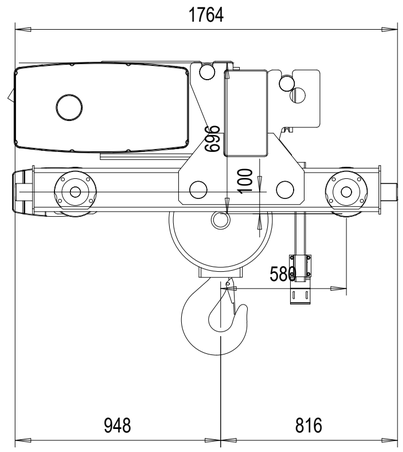

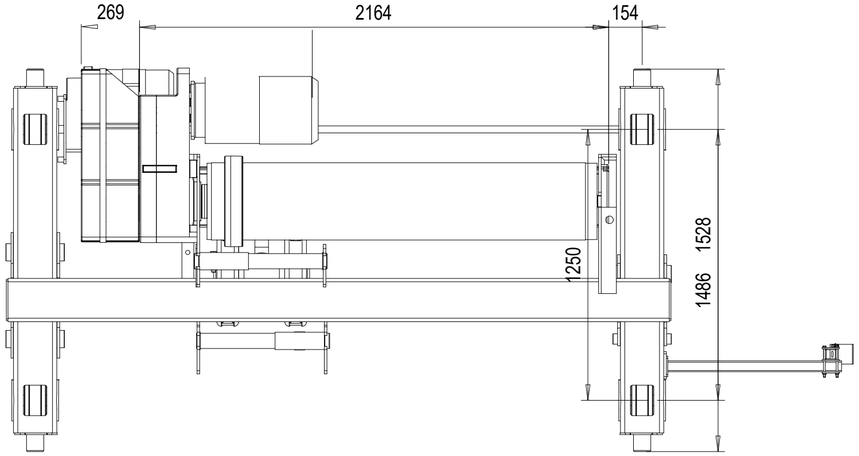

TECHNICAL DATA

LOAD	: 25000 kg
LIFTING HEIGHT	: 12 m
HOISTING SPEED	: 5/0,83 m/min 2-speed
TRAVERSING SPEED	: 20/5 m/min 2-speed pole change
WEIGHT OF HOIST	: 1989 kg
HOIST GROUP	: 3,0 + 3,0 m (D_lin4) / ISO M4
MAIN / CONTROL VOLTAGE	: 380 / 48 V; 50 Hz

Approved: _____ Place _____ Date _____ Company (Company stamp)

Customer

STAHL CraneSystems

Free size tolerance

Material

Quotation No.
Order No.

Reproduction and transmission to third parties is not permitted
We reserve all rights under copyright for this drawing

SHD25t x 16.5m Hol:12m

Version DAS
NSL
TCHAR
Scale 1:20

Company: STEPHAN CraneSystems GmbH

	Datum	Name
Drawn by	10.12.2018	DMA/XRS
Checked by		
Released		

Issue N/a

25-16.5-12-O

Replaced by

Copy to

Note! Additional options can affect weights and dimensions of some components.

This document is the absolute property of STEPHAN CraneSystems GmbH. This document must not be copied without the written permission of STEPHAN CraneSystems GmbH or its parent company STAHL CraneSystems GmbH. The contents thereof must not be disclosed to a third party nor be used for any unauthorized purpose. Contravention will be prosecuted.

REV	CHANGE DESCRIPTION	ECN	DATE	REVISED BY	APPROVED BY

25-16.5-12-O

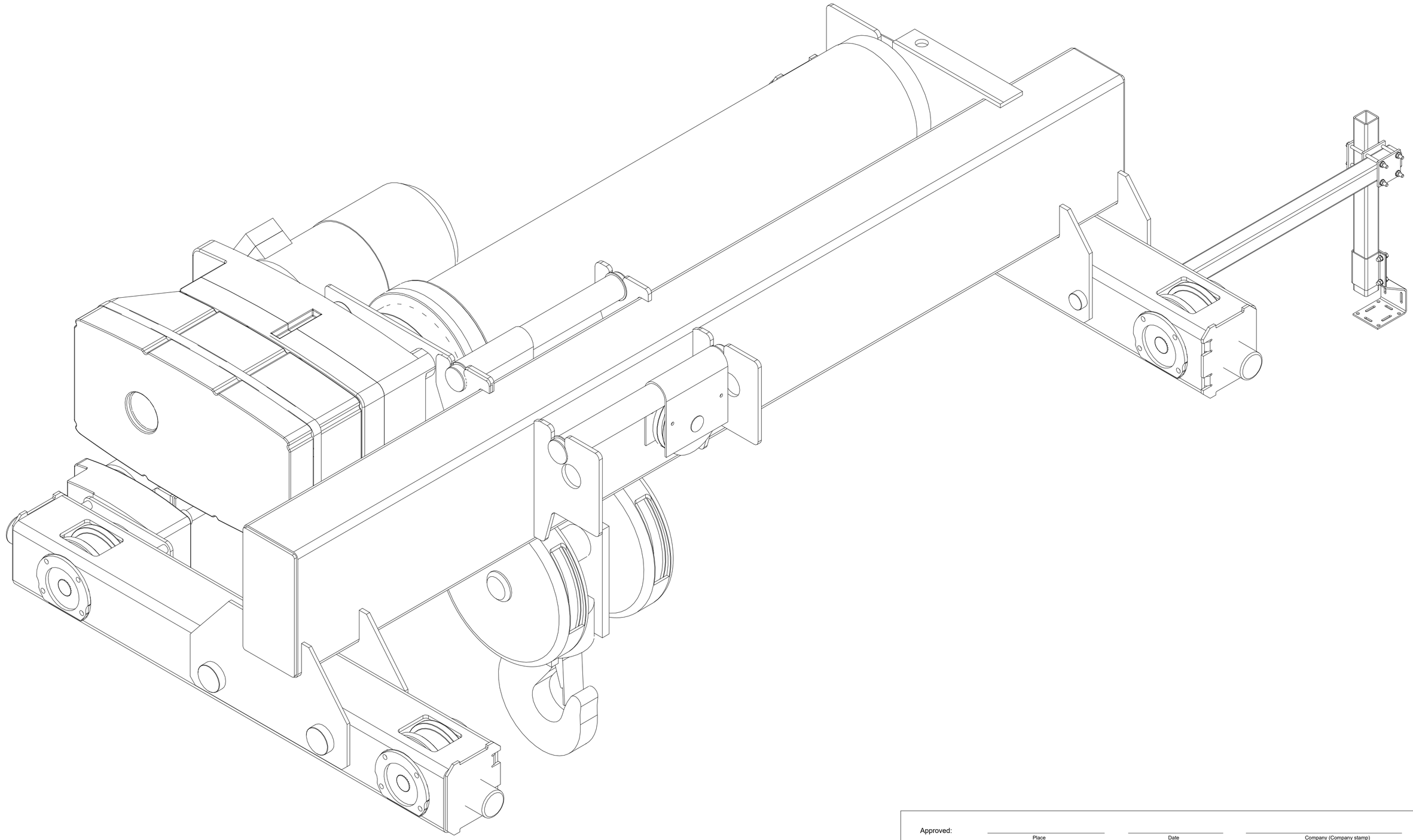

Note! Additional options can affect weights and dimensions of some components.

Approved: _____ Place _____ Date _____ Company (Company stamp)

Customer

STAHL CraneSystems

Free size tolerance

Material

Quotation No.
Order No.

Reproduction and transmission to third parties is not permitted
We reserve all rights under copyright for this drawing

SHD25t x 16.5m Hol:12m

Version DAS
NSL
TCHAR
Scale 1:2.5
Copy to

Company: STEPHAN CraneSystems GmbH

	Datum	Name
Drawn by	10.12.2018	DMA/XRS
Checked by		
Released		

Issue N/a

25-16.5-12-O

Replaced by

This document is the absolute property of STEPHAN CraneSystems GmbH. This document must not be copied without the written permission of STEPHAN CraneSystems GmbH or its parent company STAHL CraneSystems GmbH. The contents thereof must not be disclosed to a third party nor be used for any unauthorized purpose. Contravention will be prosecuted.