REV	CHANGE DESCRIPTION	ECN	DATE	REVISED BY	APPROVED BY

2-20.5-6-O

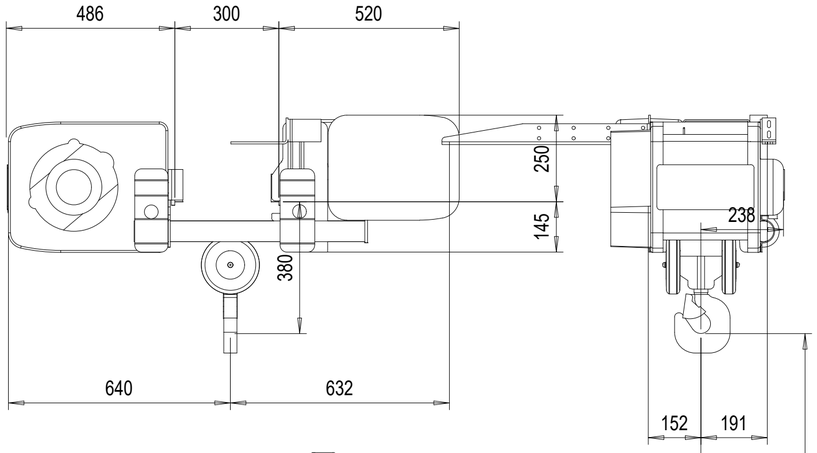

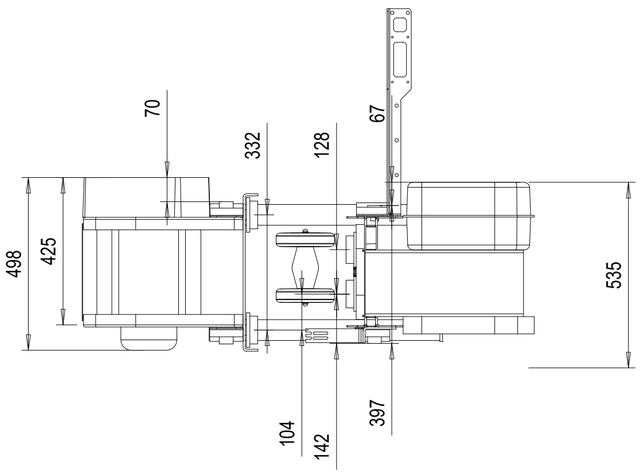

TECHNICAL DATA

LOAD	: 3200 kg
LIFTING HEIGHT	: 6 m
HOISTING SPEED	: 5/0,83 m/min 2-speed
TRAVERSING SPEED	: 20/5 m/min 2-speed pole change
WEIGHT OF HOIST	: 220 kg
HOIST GROUP	: ISO M5
MAIN / CONTROL VOLTAGE	: 380 / 48 V; 50 Hz

Pos	Amount	Description	Specification

Twin copy

DMA/SCG Design	Chd	Appd	Ref drawing	DAS / 2.98.18 Vx proj
20.03.2019 Date	BB04L5AFP2			1 :12.5
Schwäbisch Hall Dept				M-film
				Issue

SWF KRANTECHNIK

SWF Krantechnik reserves the right to alter or amend the above information without notice.
This document and the information contained herein, is the exclusive property SWF Krantechnik and represents a non-public, confidential and proprietary trade secret that may not be reproduced, disclosed to third parties, altered or otherwise employed in any manner whatsoever without the express written consent of SWF Krantechnik GmbH. Copyright © SWF Krantechnik. All rights reserved.

REV	CHANGE DESCRIPTION	ECN	DATE	REVISED BY	APPROVED BY

2-20.5-6-O

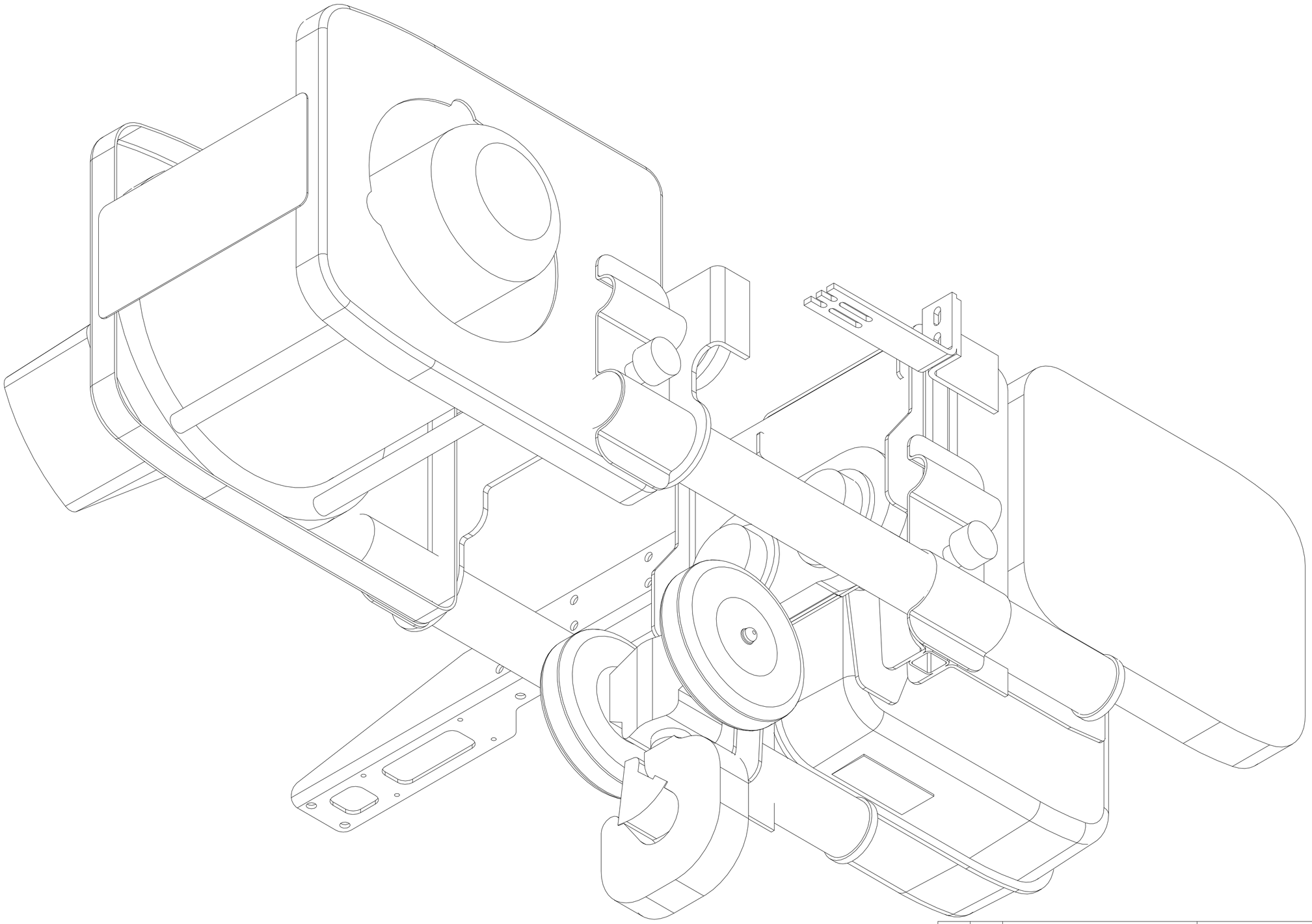

Pos	Amount	Description	Specification

DMA/SCG Design	Chd	Appd	Ref drawing	DAS / 2.98.18 Vx proj
20.03.2019 Date	BB04L5AFP2			1:2.5
Schwäbisch Hall Dept				M-film
SWF KRANTECHNIK				Issue

Twin copy

SWF Krantechnik reserves the right to alter or amend the above information without notice.
This document and the information contained herein, is the exclusive property SWF Krantechnik and represents a non-public, confidential and proprietary trade secret that may not be reproduced, disclosed to third parties, altered or otherwise employed in any manner whatsoever without the express written consent of SWF Krantechnik GmbH. Copyright © SWF Krantechnik. All rights reserved.